- AC radial blower with external rotor shaded-pole motor. Impedance protected against overloading.
- Blower wheel of fibreglass-reinforced plastic, with steel plate reinforced.
- Air exhaust radial. Rotational direction CW looking at rotor.
- Electrical connection via leads AWG 22. Stripped and tinned ends.
- Mass 500 g.

Series RER 125 138 Ø x 40 mm

Air Flow	Air Flow	Nominal Voltage	Frequency	Noise	Sintec-Sleeve Bearings / Ball Bearings	Power Input	Nominal Speed	Temperature Range	Service Life L_{10} at 40 °C	at t_{max}	Curve	Type
m³/h	CFM	V	Hz	bels	□/■	Watt	min⁻¹	°C	Hours	Hours		
104	61.2	230	50	6.2	■	19	2 600	-30...+60	37 500 /	22 500	1	RER 125-19/56
115	67.6	115	60	6.5	■	18	2 850	-30...+70	40 000 /	20 000	2	RER 125-19/06

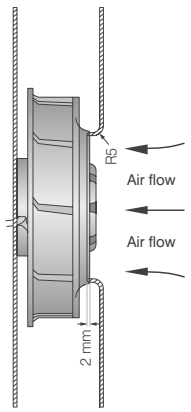

The air flow and noise level of fans without external housing depend on the installation conditions. The stated air flow and noise levels have been measured under the following conditions: centrifugal fan mounted on a base plate 220 x 220 mm. Cover plate 220 x 220 mm with an air-inlet of Ø 86 mm, concentric to the blower wheel.

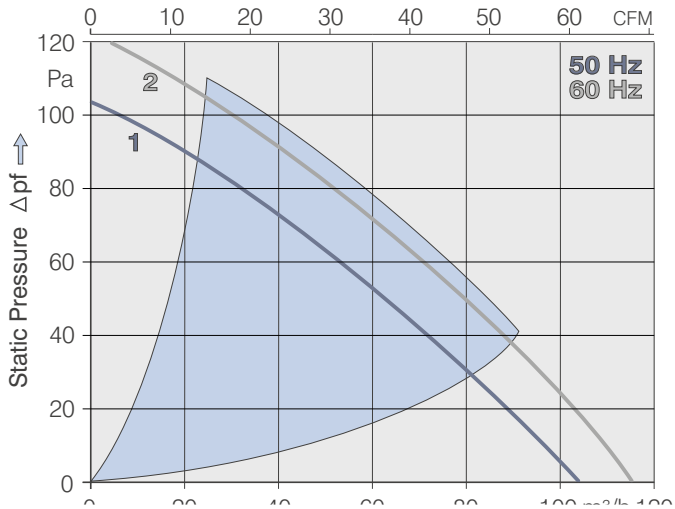

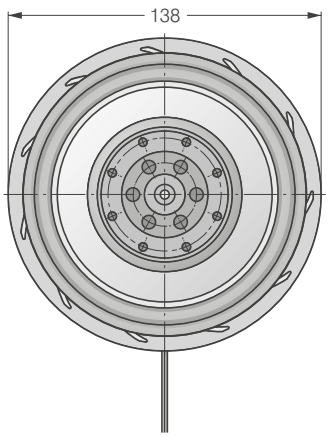

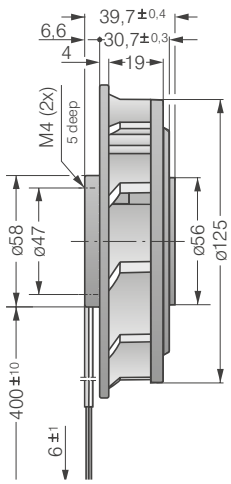

SERVO RECAMBIOS, S.A.

www.servorecambios.com
www.sr-electricmotors.com

Barcelona • Telf. (+34) 93 462 08 19 • Fax. (+34) 93 462 07 88